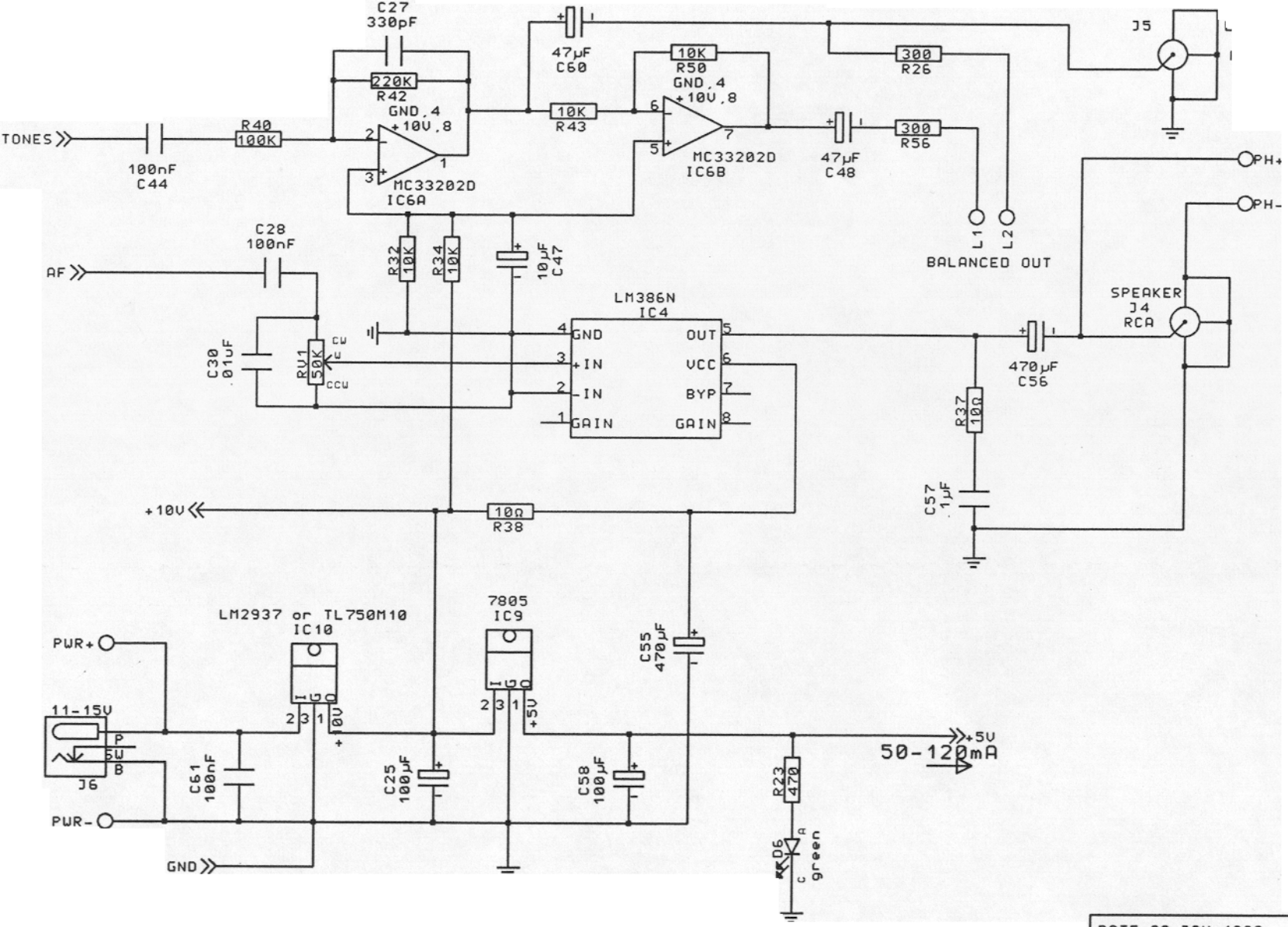

DATE:	20 JAN 1999
SHEET NAME:	AFAMP
PROJECT:	WEATHER RECEIVER