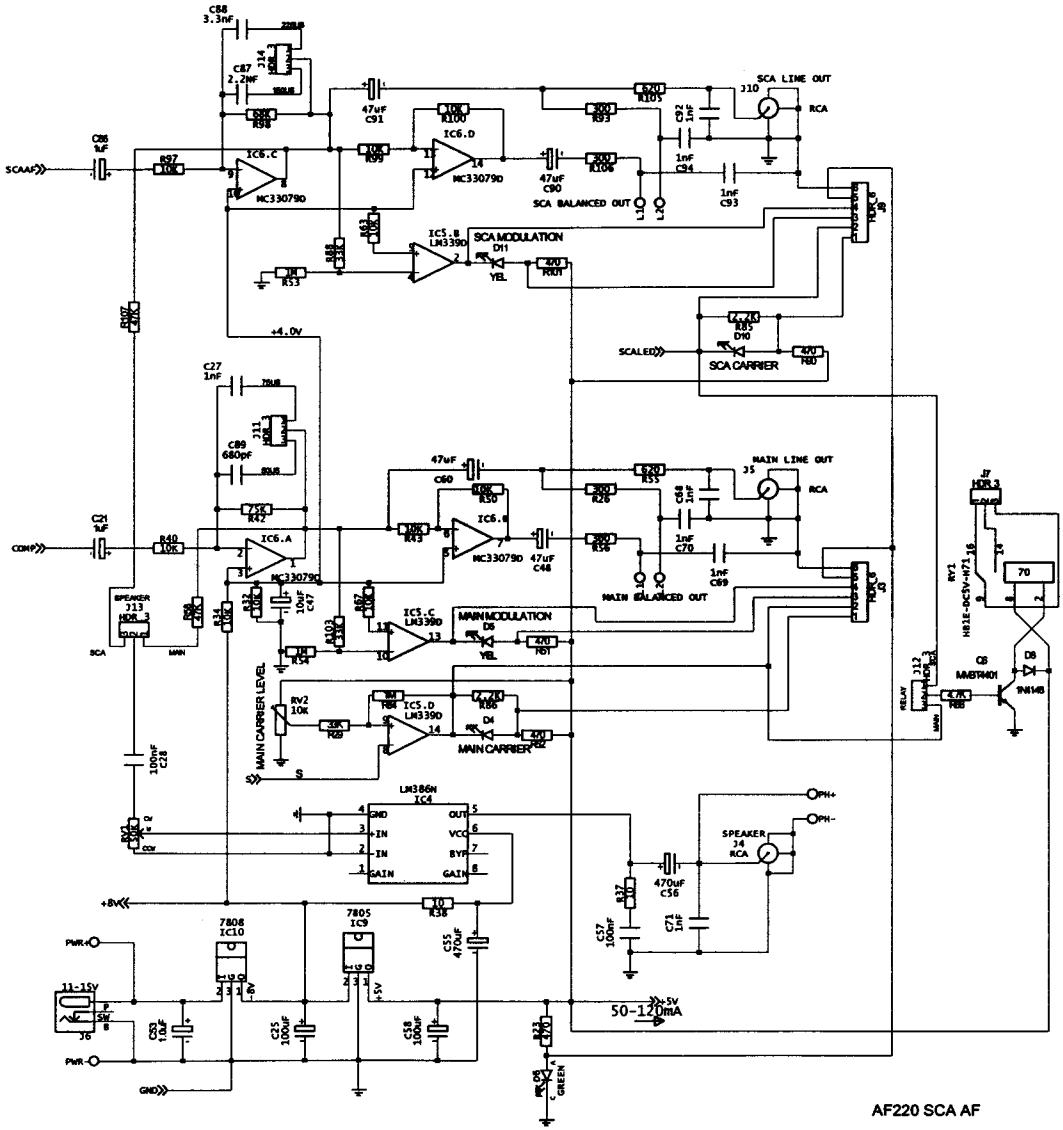
SCA LINE OUT
J10
RCA
SCA BALANCED OUT
SCA MODULATION
D11
YEL
SCA CARRIER
D10
MAIN LINE OUT
J5
MAIN BALANCED OUT
MAIN MODULATION
D9
MAIN CARRIER
D4
MAIN CARRIER LEVEL
RV2 10K
LM386N
IC4
SPEAKER
J4
RCA
IC6.C
IC6.D
IC6.A
IC6.B
IC5.B
IC5.C
IC5.D
MC33079D
LM339D
7808
IC10
7805
IC9
11-15V
J6
PWR+
PWR-
GND
+8V
+5V
50-120mA
+4.0V
SCAAF
COMP
SCALED
SPEAKER
J13
SCA
MAIN
RELAY
J12
J7
RV1
HB1E-DC5V-H71
Q8
MMBT4401
D8
1N148
PH+
PH-
GREEN
D6

AF220 SCA AF